SERIES 2600 LIFT ASSEMBLY

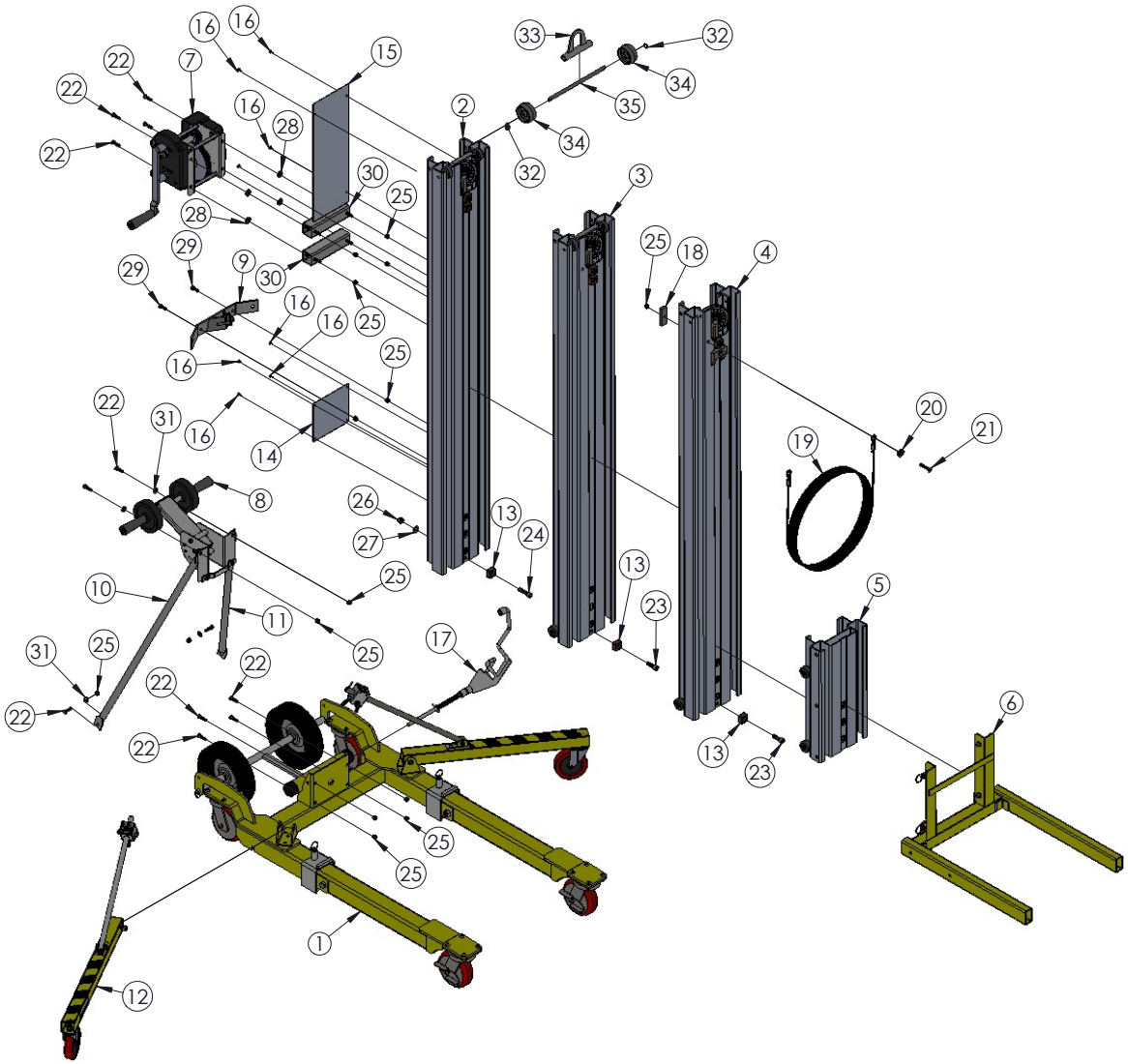

ITEM NO.	PART NUMBER	DESCRIPTION	QTY.
1	783070	BASE ASSEMBLY, 2600 SERIES LIFT	1
2	783160	BOTTOM MAST ASSEMBLY, 2600 SERIES LIFT	1
3	783161	CENTER MAST ASSEMBLY, 2600 SERIES LIFT	1
4	783162	TOP MAST ASSEMBLY, 2600 SERIES LIFT	1
5	783533	CARRIAGE ASSEMBLY	1
6	783165	FORK ASSEMBLY, 2600 SERIES LIFT	1
7	785379	WINCH ASSEMBLY, 2 SPEED 2600 LIFT	1
8	786575	HANDLE ASSEMBLY, CB LIFT	1
9	783582	SPREADER PLATE ASSEMBLY	1
10	780820	BRACE MAST RIGHT	1
11	780819	BRACE MAST LEFT	1
12	783935	OUTRIGGER ASSEMBLY 2000/2100	1
13	783575	STOP BLOCK	3
14	783916	MAST COVER ALUM BTM 2000/2100/2600	1
15	783918	MAST COVER ALUM TOP 2000/2100/2600	1
16	776055	SCREW, SM #8 X 3/4 SELF TAPPING	8
17	783040	MAST HOLD DOWN BAR TYPE 2100	1
18	783551	LOCK BLOCK	1
19	783886	LOAD LINE ASSEMBLY 2010	1
19	783834	LOAD LINE ASSEMBLY 2015	1
20	782910	ROPE RET. WASHER	1
21	771248	SCREW, FHSC 3/8-16 X 2"LN	1
22	771060	SCREW, HHC 3/8-16X1.25"LN	16
23	771257	SCREW, SHC 1/2 - 13 X 1 - 1/2	2
24	771252	SCREW, SHC 1/2-13X2"LN	1
25	772355	NUT, INSERT LOCK 3/8-16	19
26	772358	NUT, INSERT JAM 1/2 -13	1
27	773094	WASHER, FLAT 1/2 SAE	1
28	773005	WASHER FLAT 3/8 RUBBER SEALING	4
29	771107	SCREW, HHC 3/8-16 X 1	2
30	783552	STANDOFF-2112	2
31	773040	WASHER, FLAT 3/8	4
32	774053	PIN, COTTER CIRCLE 3/4"	2
33	786585	LIFTING HOOK WELDMENT	1
34	779012	WHEEL, POLYOLEFIN 3"	2
35	783620	SHAFT, ROLLER	1

UPPER AND LOWER MAST ASSEMBLY

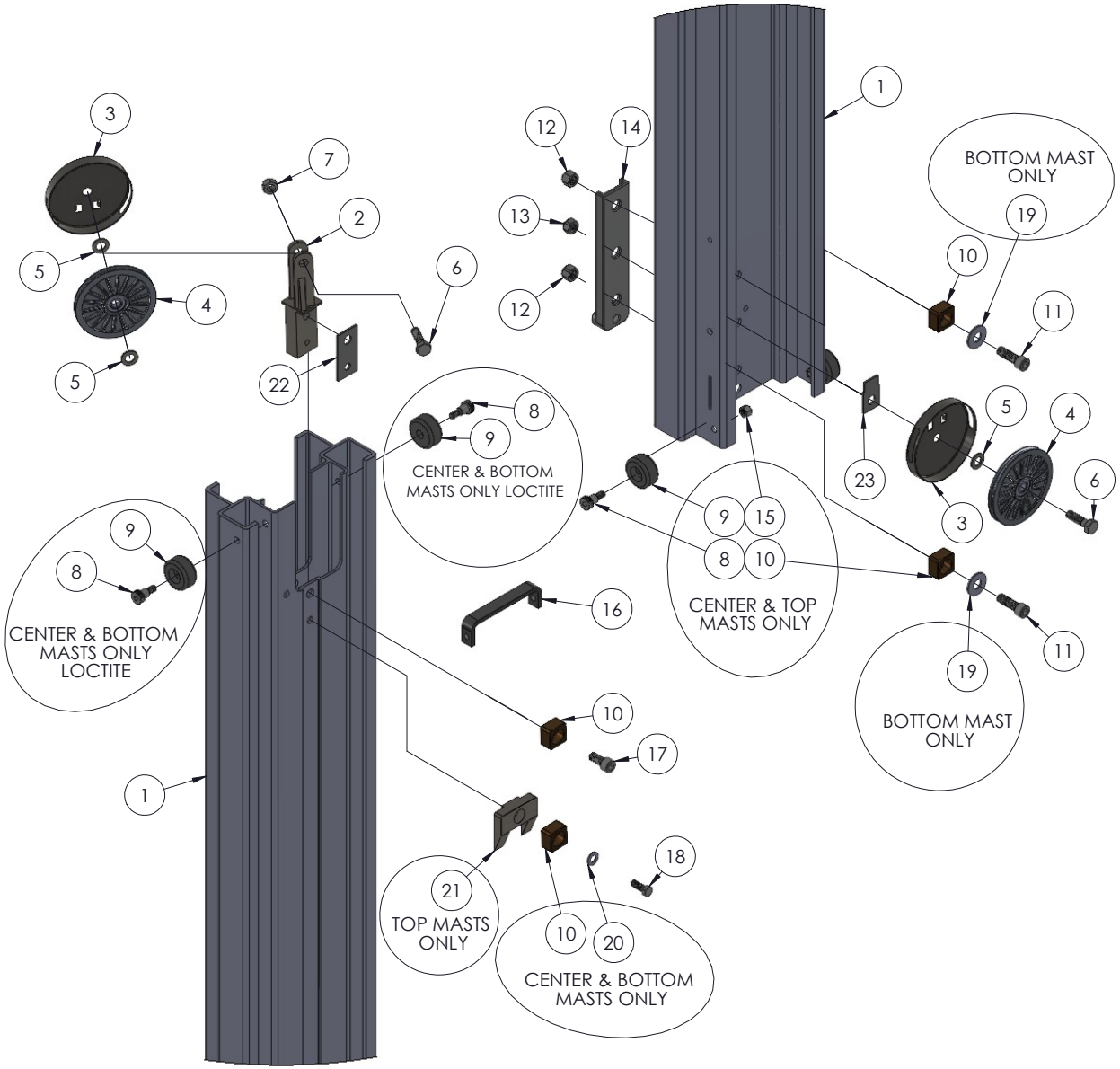

ITEM NO.	PART NUMBER	DESCRIPTION	QTY.
1	783245	BOTTOM MAST MACHINED, 2600 SERIES LIFT	1
2	783489	UPPER PULLEY BRACKET, 2600 SERIES	1
3	783536	PULLEY GUARD	2
4	783921	PULLEY ASSEMBLY	2
5	773108	WASHER, FLAT 7/16" GRADE 8	3
6	771161	SCREW, HHC M12-1.75 X 40	2
7	772505	NUT, INSERT JAM M12	1
8	771350	SCREW, SHOULDER 1/2 X 1/2 (TOP QTY 2)	2
8	771350	SCREW, SHOULDER 1/2 X 1/2 (CENTER QTY 4)	4
8	771350	SCREW, SHOULDER 1/2 X 1/2 (BOTTOM QTY 2)	2
9	778340	MAST ROLLER (TOP QTY 2)	2
9	778340	MAST ROLLER (CENTER QTY 4)	4
9	778340	MAST ROLLER (BOTTOM QTY 2)	2
10	783575	STOP BLOCK (TOP 2)	2
10	783575	STOP BLOCK (CENTER 4)	4
10	783575	STOP BLOCK (BOTTOM 2)	2
11	771257	SCREW, SHC 1/2 - 13 X 1 - 1/2	2
12	772357	NUT, INSERT LOCK 1/2 - 13	2
13	772800	NUT, INSERT LOCK 12MM	1
14	783478	BACK PLATE WELDMENT	1
15	772350	NUT, INSERT JAM 3/8 - 16 (TOP QTY 2)	2
15	772350	NUT, INSERT JAM 3/8 - 16 (CENTER QTY 2)	2
16	783248	2600 REINFORCEMENT BRACKET (CENTER QTY 1)	1
16	783248	2600 TOP REINFORCEMENT BRACKET (BOTTOM QTY 1)	1
17	771258	SCREW, SCH 1/2-13X 1"	1
18	771107	SCREW, HHC 3/8-16 X 1	1
19	773060	WASHER, FLAT 1/2 USS	2
20	773022	WASHER, FLAT 3/8 SAE HARDENED (CENTER QTY 1)	1
20	773022	WASHER, FLAT 3/8 SAE HARDENED (BOTTOM QTY 1)	1
21	783694	STOP BLOCK WEDGE	1
22	783484	PLATE, TOP PULLEY MOUNT 2600	1
23	783069	SHIM, 2600 PULLEY GUARD	1

MAST HOLD DOWN ASSEMBLY

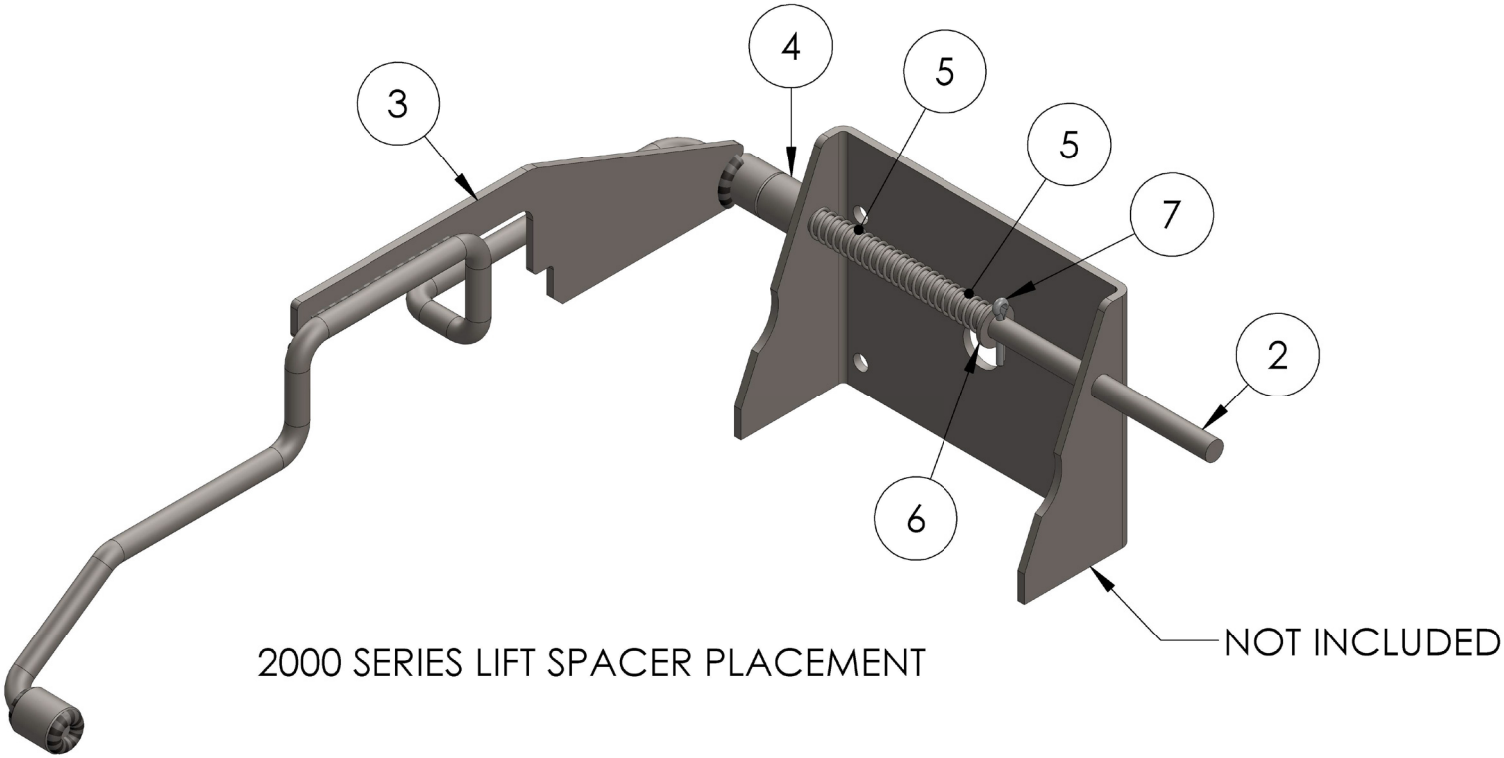

ITEM NO.	PART NUMBER	DESCRIPTION	QTY.
2	783042	MAST HOLD DOWN DEVICE	1
3	783046	MAST HOLD DOWN REINFORCEMENT BRACKET	1
4	783044	MAST HOLD DOWN SPACER	3
5	776216	SPRING, CENTURY #71912S	2
6	773096	WASHER, FLAT M12	1
7	774051	PIN, COTTER 0.125 X 0.75"	1

CARRIAGE ASSEMBLY

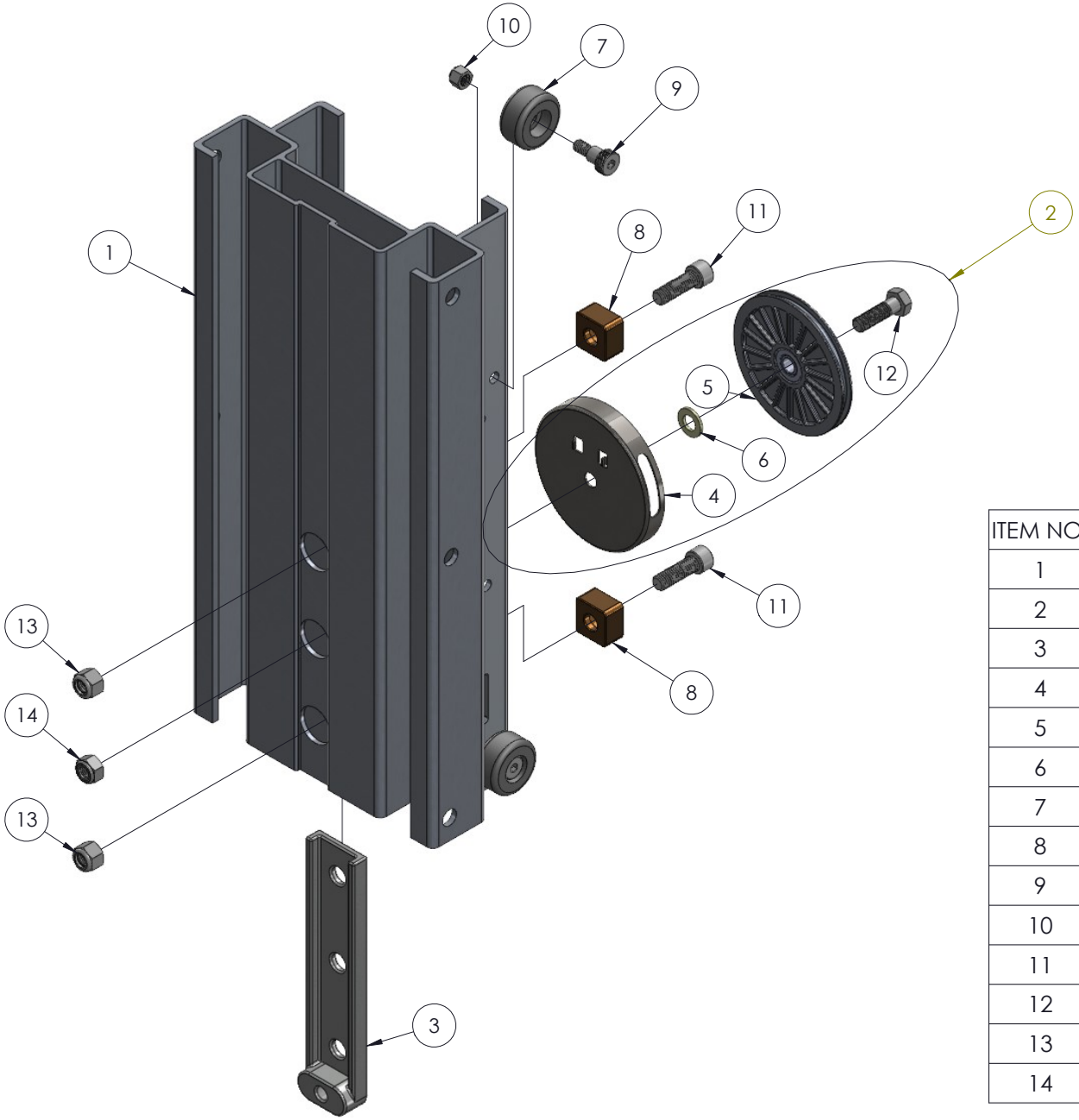

ITEM NO.	PART NUMBER	DESCRIPTION	QTY.
1	783534	CARRIAGE	1
2	783921	PULLEY ASSEMBLY 2000/2100	1
3	783478	BACK PLATE WELDMENT	1
4	783536	PULLEY GUARD	1
5	783921	PULLEY ASSEMBLY	1
6	773108	WASHER, FLAT 7/16" GRADE 8	1
7	783540	MAST ROLLER	4
8	783575	STOP BLOCK	2
9	771350	SCREW, SHOULDER 1/2 X 1/2	4
10	772350	NUT, INSERT JAM 3/8 - 16	4
11	771257	SCREW, SHC 1/2 - 13 X 1 - 1/2	2
12	771161	SCREW, HHC M12-1.75 X 40	1
13	772357	NUT, INSERT LOCK 1/2 - 13	2
14	772800	NUT, INSERT LOCK 12MM	1

BASE ASSEMBLY

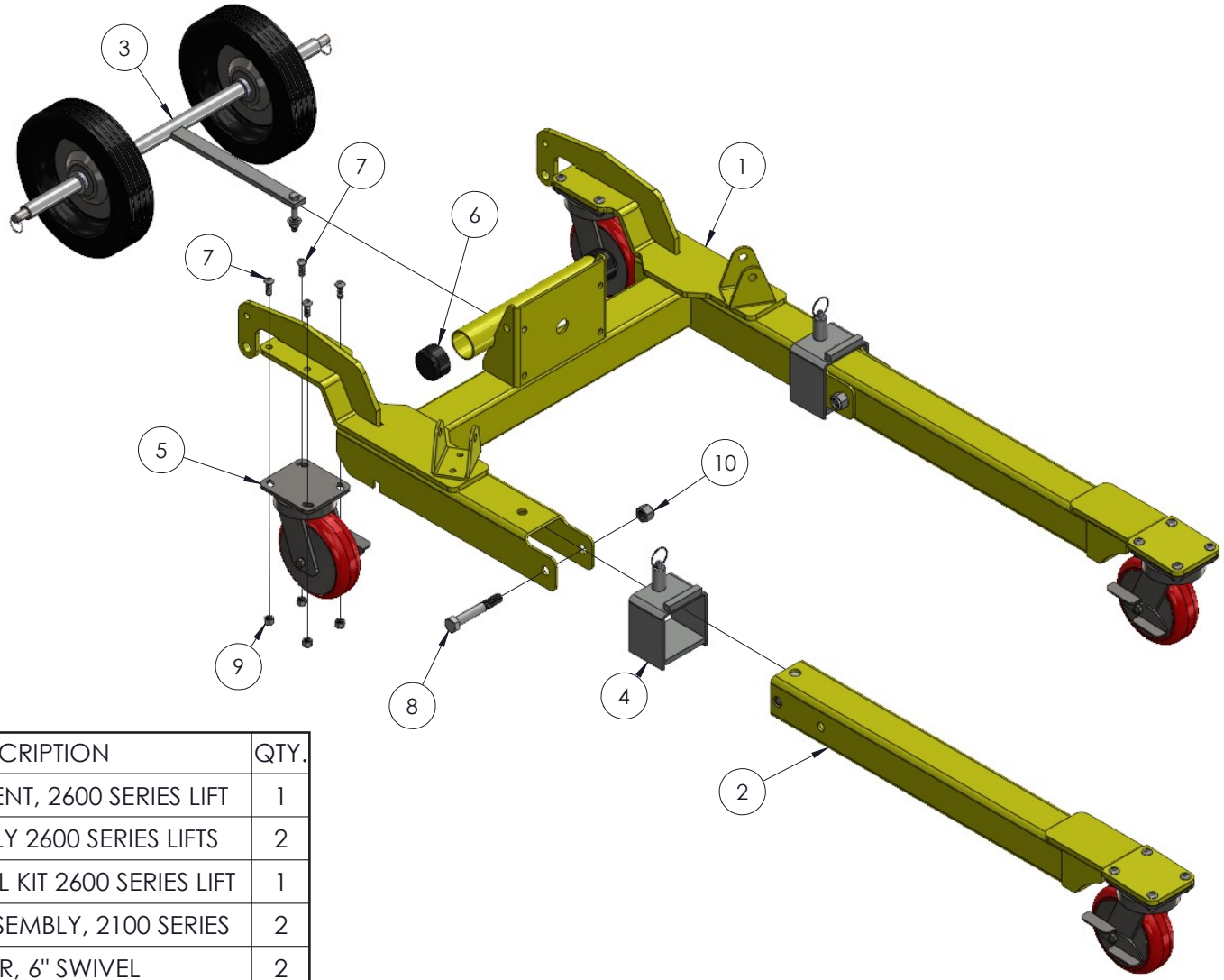

ITEM NO.	PART NUMBER	DESCRIPTION	QTY.
1	783072	BASE WELDMENT, 2600 SERIES LIFT	1
2	783083	LEG ASSEMBLY 2600 SERIES LIFTS	2
3	783094	10 INCH WHEEL KIT 2600 SERIES LIFT	1
4	783746	LEG LOCK ASSEMBLY, 2100 SERIES	2
5	779038	CASTER, 6" SWIVEL	2
6	779905	CAP, 2" OD TUBE, BLACK	2
7	771266	SCREW, BHC 3/8-16 X 1	8
8	771146	SCREW, HHC 5/8-11X4"LN	2
9	772350	NUT, INSERT JAM 3/8 - 16	8
10	772503	NUT, INSERT JAM 5/8-11	2

LEG ASSEMBLY

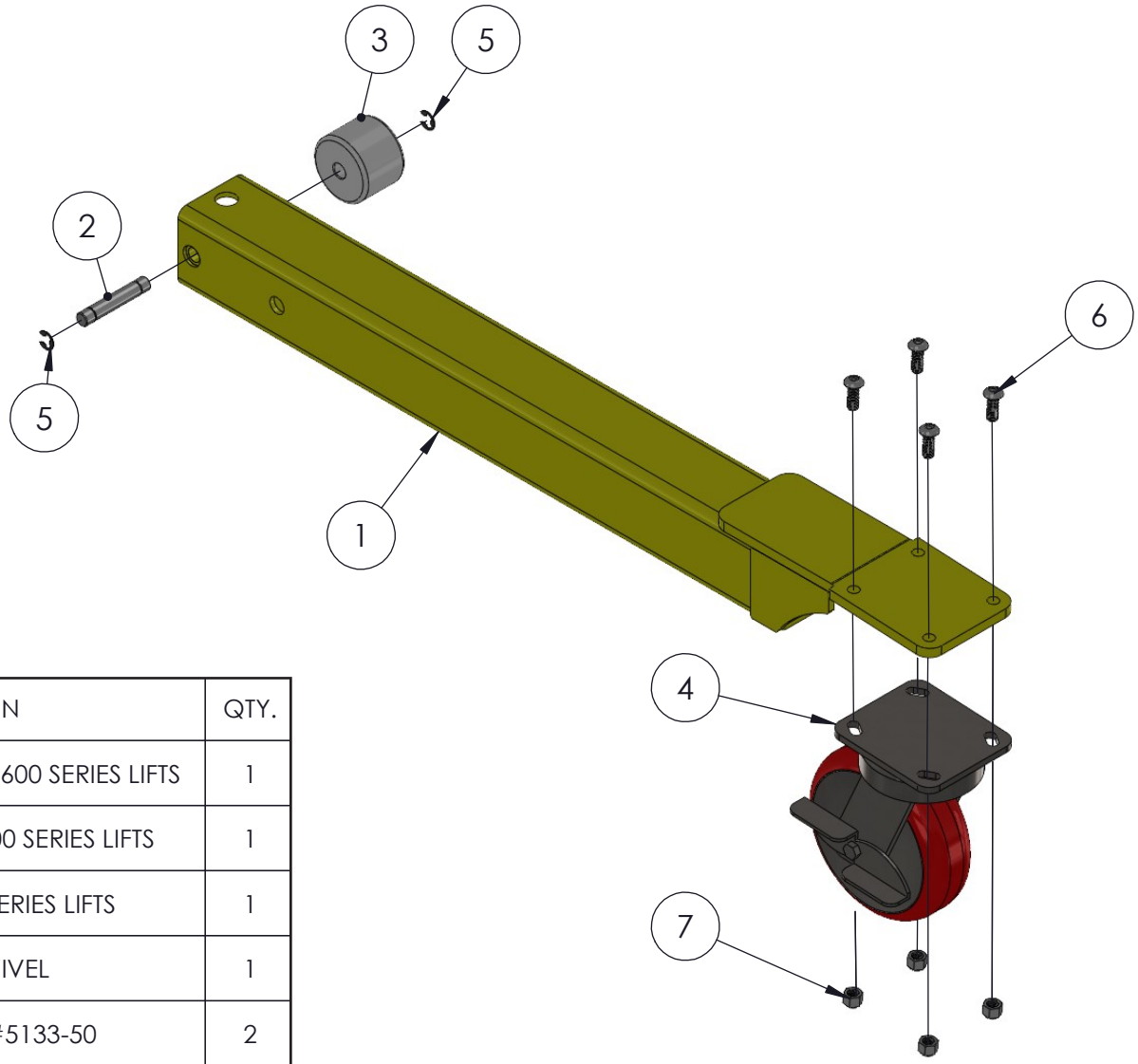

ITEM NO.	PART NUMBER	DESCRIPTION	QTY.
1	783085	FRONT LEG WELDMENT, 2600 SERIES LIFTS	1
2	783090	SHAFT, LEG ROLLER 2600 SERIES LIFTS	1
3	783091	ROLLER, LEG 2600 SERIES LIFTS	1
4	779038	CASTER, 6" SWIVEL	1
5	776079	RETAINING RING #5133-50	2
6	771266	SCREW, BHC 3/8-16 X 1	4
7	772350	NUT, INSERT JAM 3/8 - 16	4

LEG LOCK ASSEMBLY

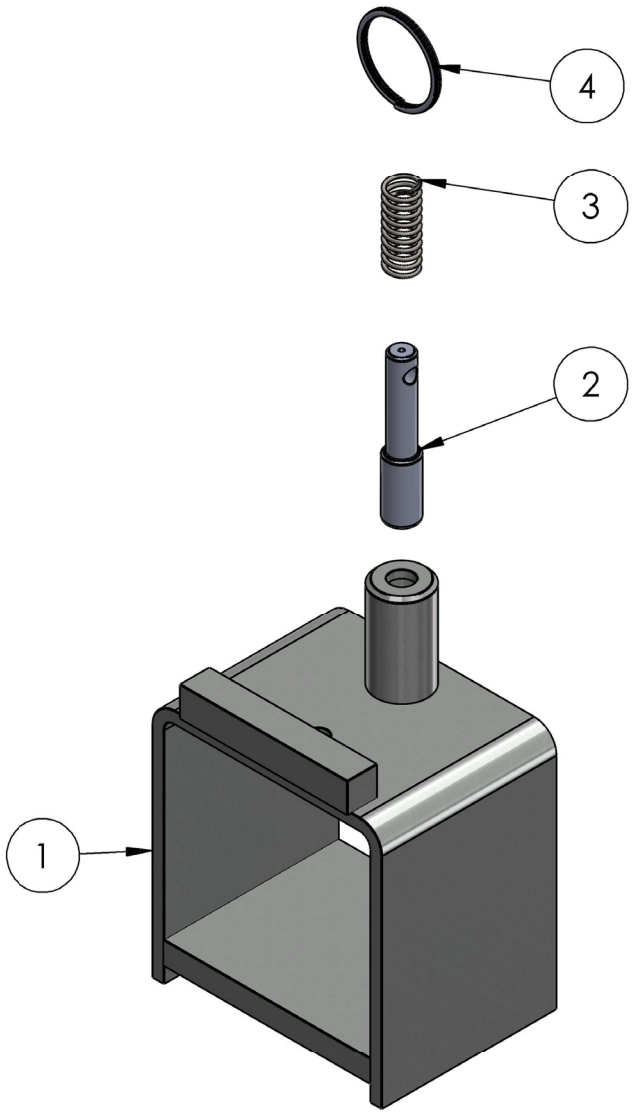

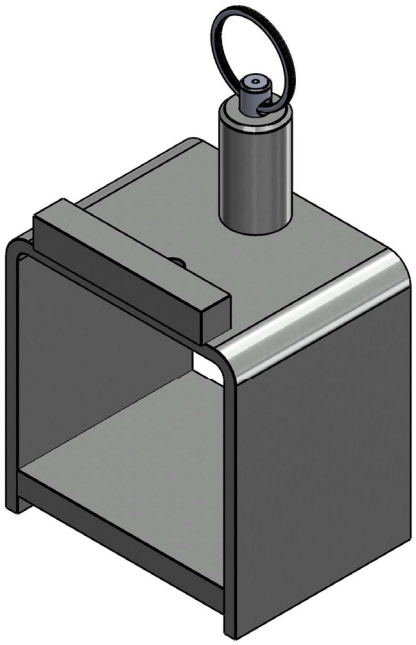

ITEM NO.	PART NUMBER	DESCRIPTION	QTY.
1	783740	LEG LOCK WELDMENT, 2100 SERIES	1
2	782510	PLUNGER	1
3	776212	SPRING, #DWC - 042 - G - 9	1
4	775110	SPLIT RING 1-1/4" NICKEL PLATED	1

OUTRIGGER ASSEMBLY

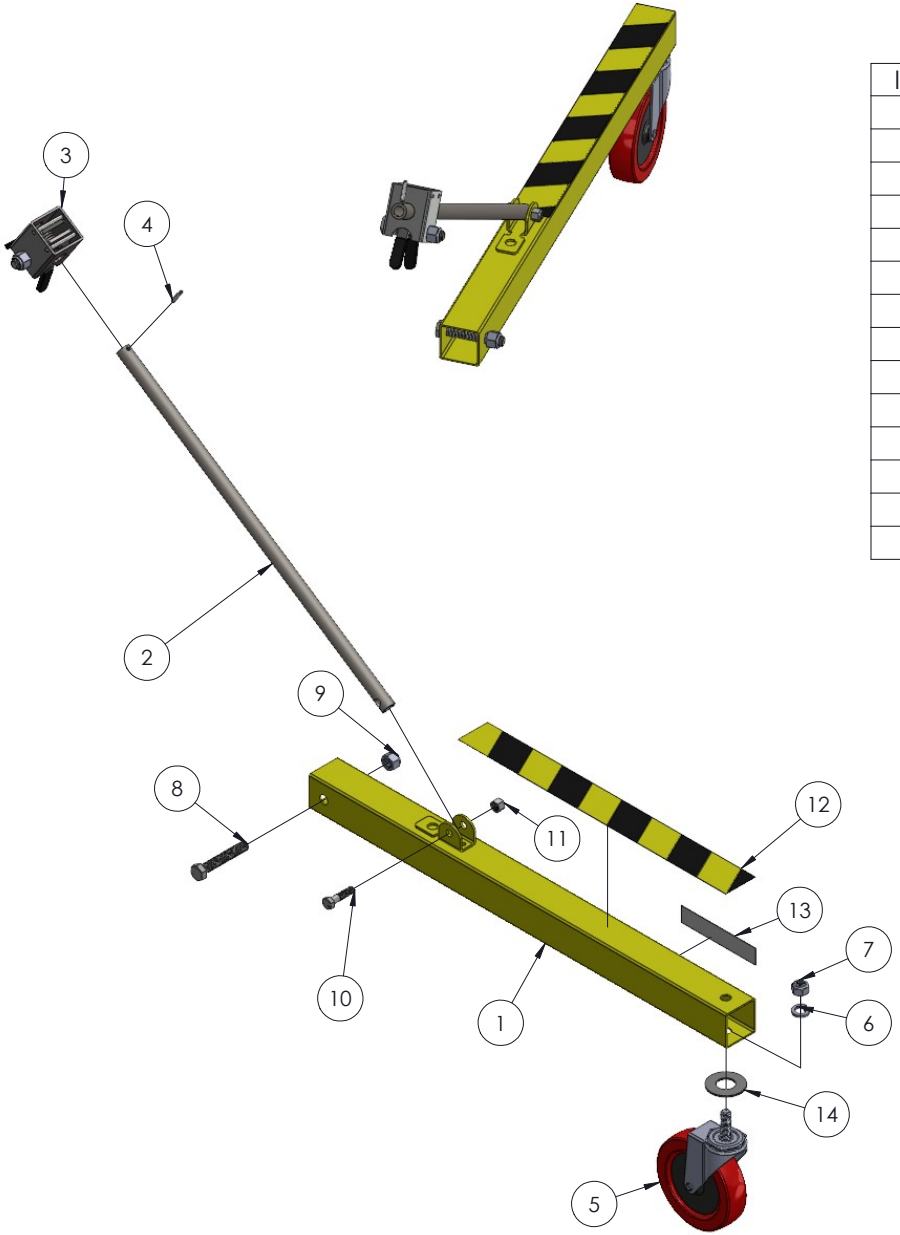

ITEM NO.	PART NUMBER	DESCRIPTION	QTY.
1	783528	LEG WELDMENT, OUTRIGGER	2
2	783938	OUTRIGGER SUPPORT TUBE, 2500	2
3	783940	OUTRIGGER LOCK ASSEMBLY	2
4	774080	PIN ROLL 3/16 X 1.0" LN	2
5	779002	CASTER, 125 X 32 12MM STEM	2
6	773590	WASHER,LOCK 1/2	2
7	772801	NUT, HEX 12MM ZINC PLATED	2
8	771142	SCREW,HHC 1/2-13 X 3"	2
9	772358	NUT, INSERT JAM 1/2 -13	2
10	771090	SCREW, HHC 3/8-16 X 1.5"	2
11	772350	NUT, INSERT JAM 3/8 - 16	2
12	778352	TAPE, 2" B/Y CAUTION STRIPE	2
13	778348	LABEL, LOWER STABILIZER LEG	2
14	773091	WASHER, FLAT 7/8" USS PLATED	2

OUTRIGGER LOCK ASSEMBLY

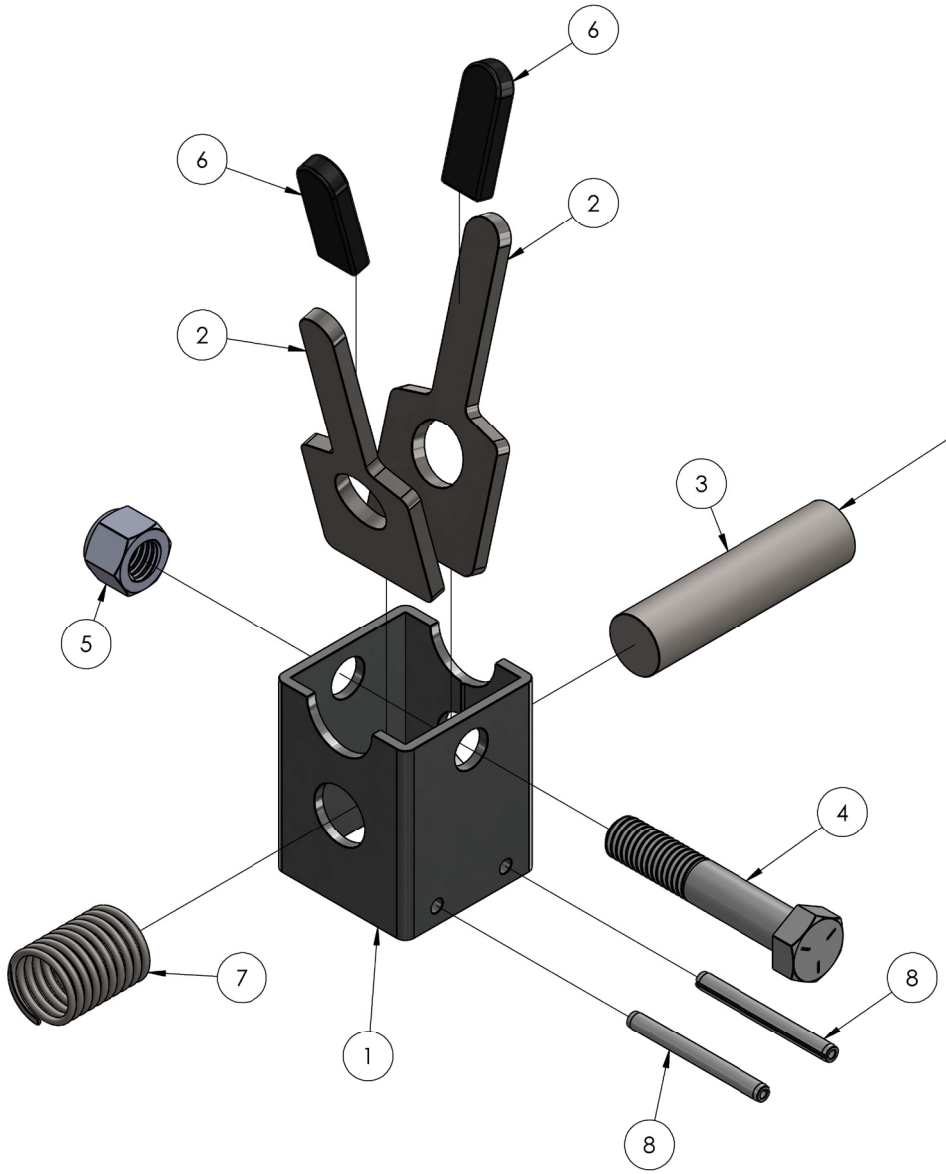

OUTRIGGER SUPPORT TUBE STUB LOCKS ASSEMBLY IS INSTALLED TO SUPPORT THE ASSEMBLY DURING SHIPMENT AND IS TO BE DISCARDED BEFORE INSTALLATION.

ITEM NO.	PART NUMBER	DESCRIPTION	QTY.
1	783941	OUTRIGGER LOCK TUBE	1
2	783942	OUTRIGGER LOCK FINGER	2
3	783944	OUTRIGGER SUPPORT TUBE STUB	1
4	771141	SCREW, HHC 1/2-13X2.75" LN	1
5	772358	NUT, INSERT JAM 1/2 -13	1
6	779938	CAP, RECT RD END 3/16X0.5X2.0"	2
7	776221	CENTURY SPRING #2952	1
8	774084	PIN, SPRING 3/16X2.0"	2

FORK ASSEMBLY

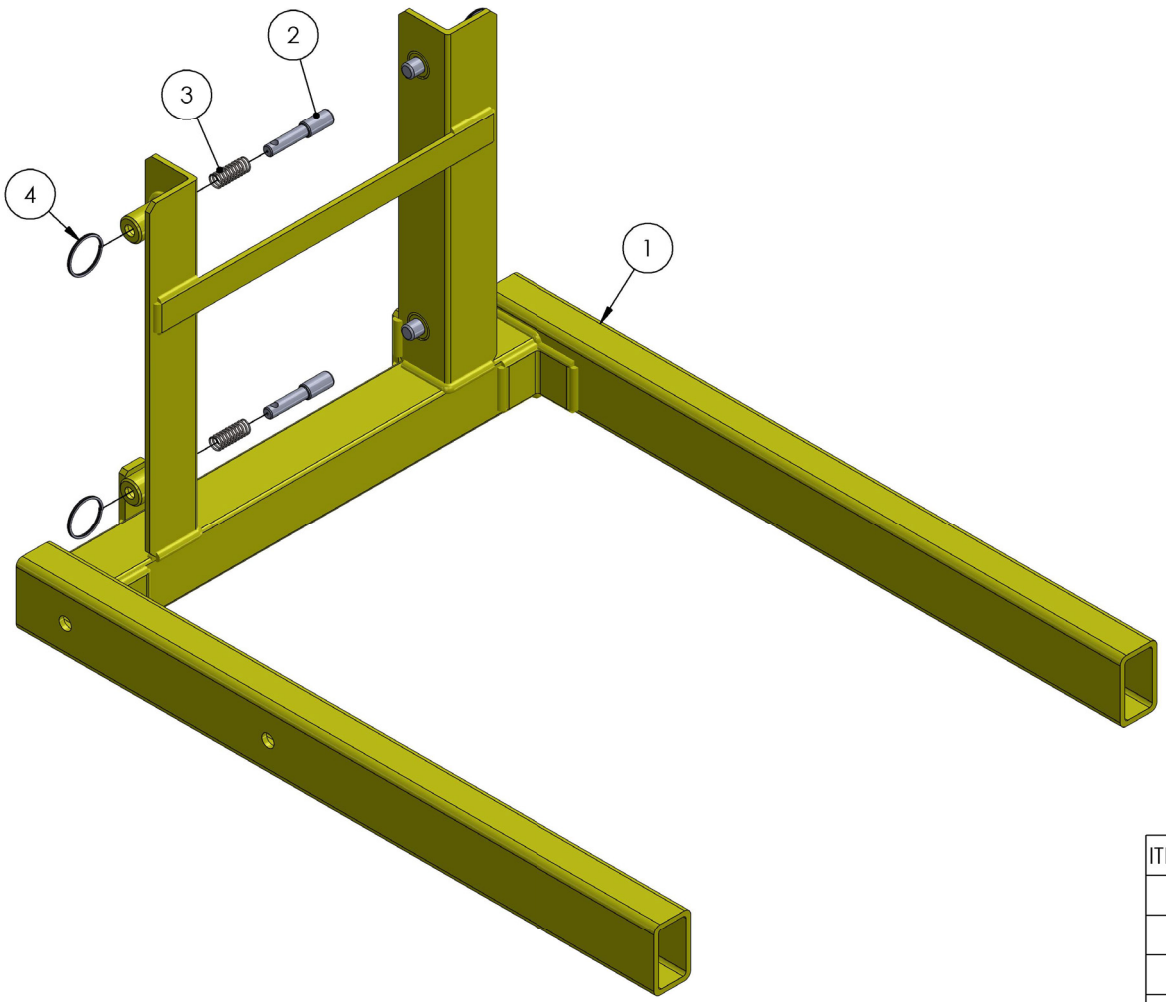

ITEM NO.	PART NUMBER	DESCRIPTION	QTY.
1	783166	FORK WELDMENT, 2600 SERIES LIFTS	1
2	782510	PLUNGER	4
3	776212	SPRING, #DWC - 042 - G - 9	4
4	775110	SPLIT RING 1-1/4" NICKLE PLATED	4

FORK EXTENSION ASSEMBLY

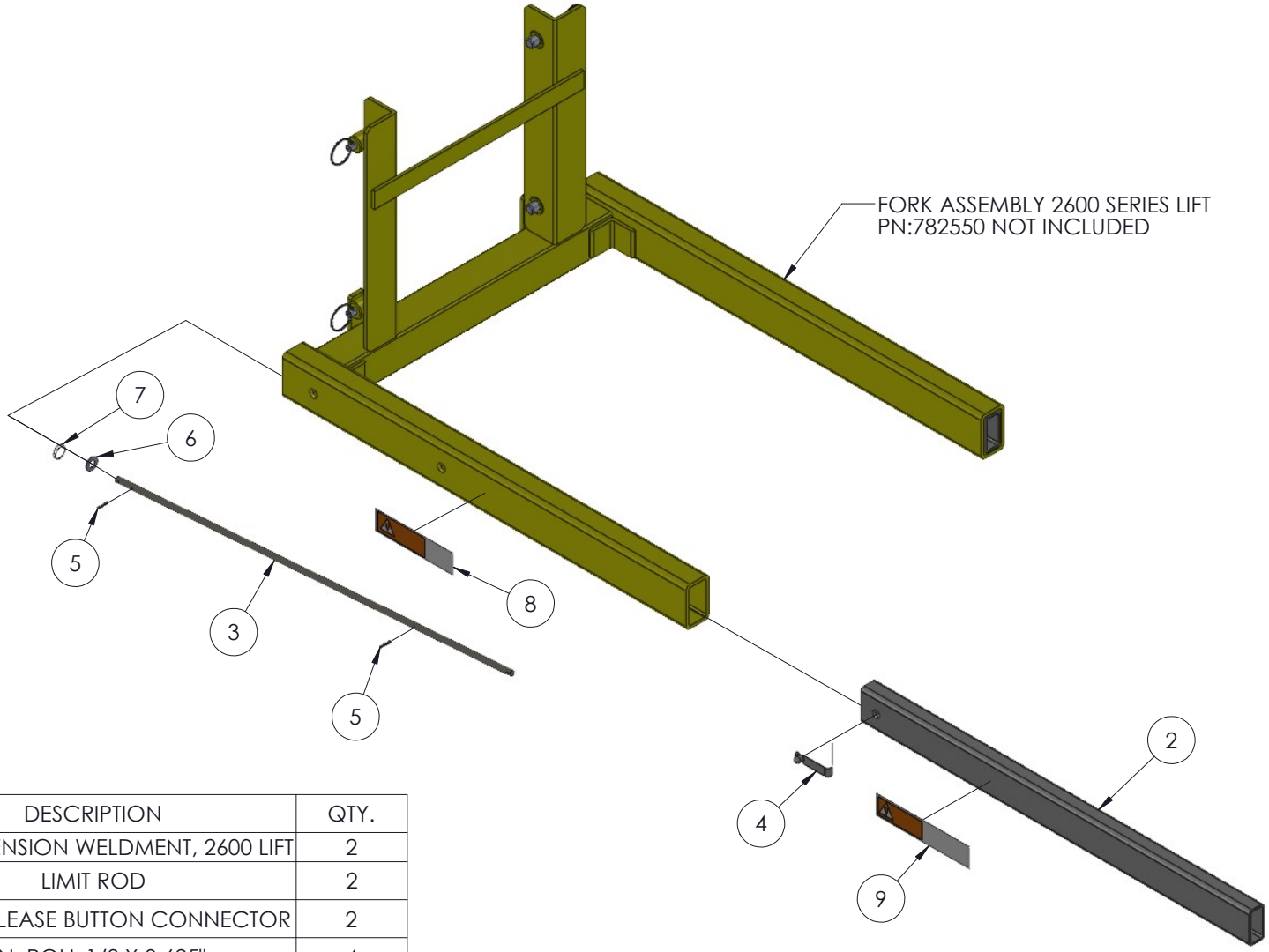

ITEM NO.	PART NUMBER	DESCRIPTION	QTY.
2	783168	FORK EXTENSION WELDMENT, 2600 LIFT	2
3	783589	LIMIT ROD	2
4	774010	QUICK RELEASE BUTTON CONNECTOR	2
5	774092	PIN, ROLL 1/8 X 0.625"	4
6	773042	WASHER, FLAT 5/16	2
7	774053	COTTER, CIRCLE Z/P 0.048 X 0.75"	2
8	778340	LABEL, FORK EXTENSION WARNING	2
9	778349	LABEL , WARNING MAX LOAD	2

10 IN. WHEEL KIT ASSEMBLY

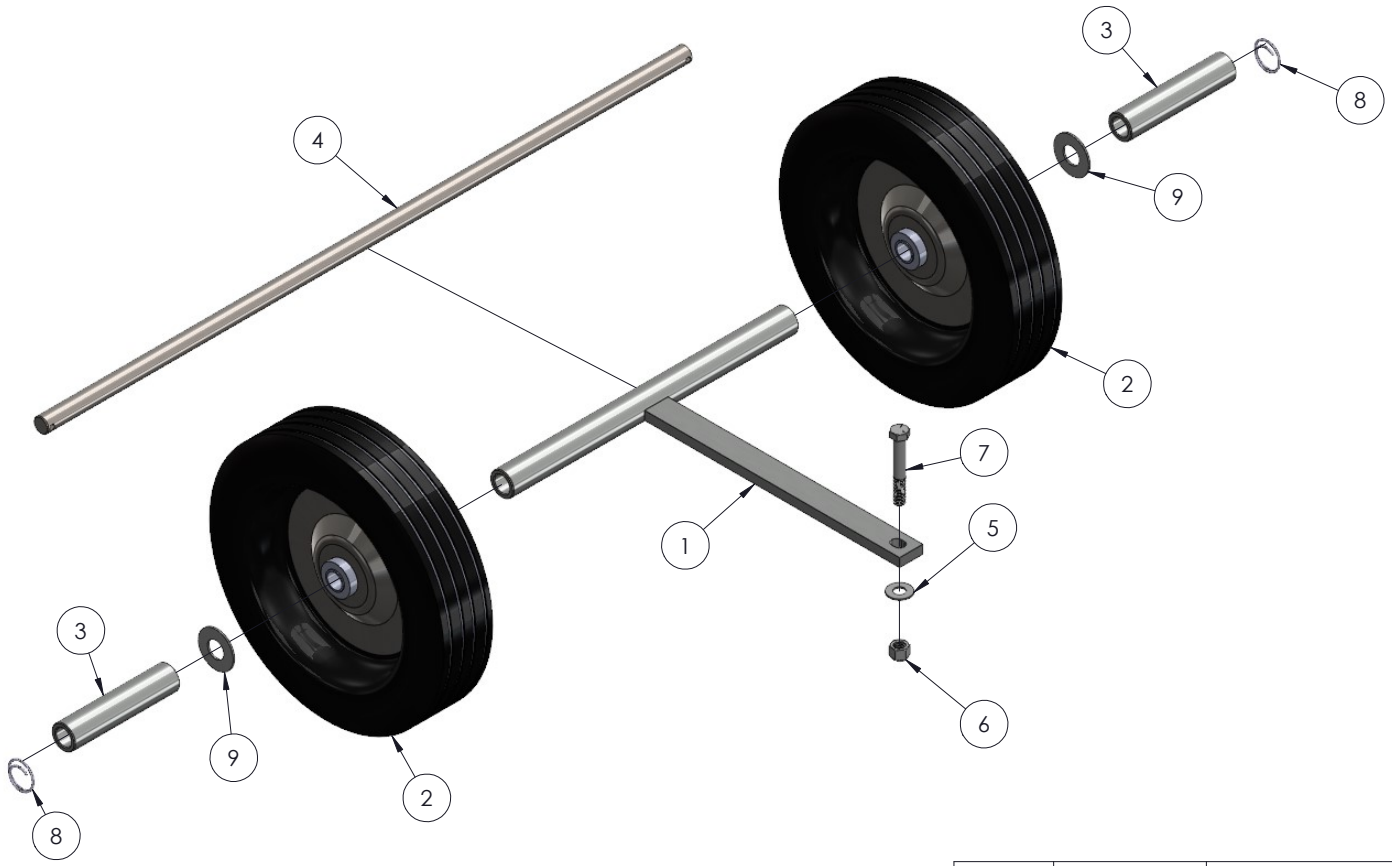

ITEM NO.	PART NUMBER	DESCRIPTION	QTY.
1	783095	AXLE SUPPORT WELDMENT, 10" WHEEL KIT 2600 LIFT	1
2	779011	WHEEL, 10" RUBBER TIRE	2
3	783038	OUTSIDE AXLE SPACER, 2600 SERIES LIFT	2
4	782544	AXLE, MODEL 209	1
5	773040	WASHER, FLAT 3/8	1
6	772355	NUT, INSERT LOCK 3/8-16	1
7	771110	SCREW, HHC 3/8-16 X 2.5"LN	1
8	774054	COTTER, CIRCLE Z/P 0.072 X 1.125"	2
9	773051	WASHER, FLAT 5/8 USS	2

SPREADER PLATE ASSEMBLY

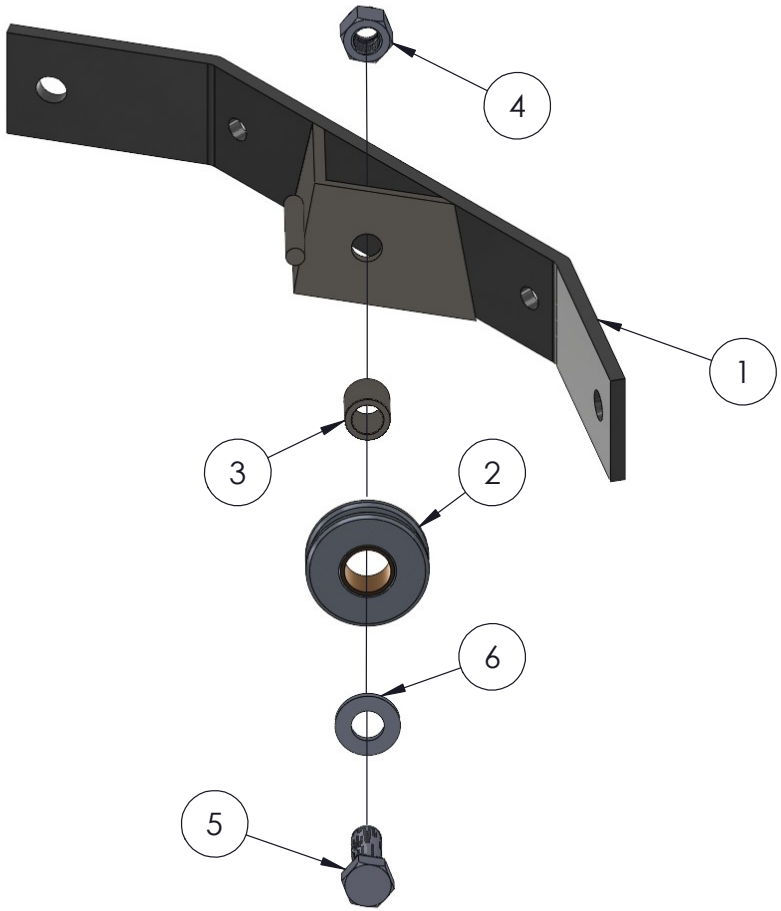

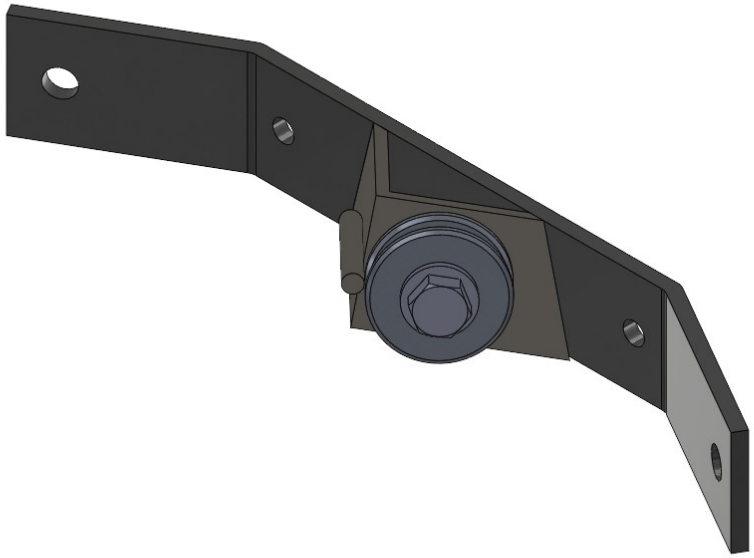

ITEM NO.	PART NUMBER	DESCRIPTION	QTY.
1	783581	SPREADER PLATE WELDMENT	1
2	780025	SHEAVE, RAB-222 (2") Z-22	1
3	782960	ROLLER SHAFT, CARR.715/720	1
4	772358	NUT, INSERT JAM 1/2 -13	1
5	771120	SCREW, HHC 1/2-13 x 1.5" LN	1
6	773094	WASHER, FLAT 1/2 SAE	1

SPEED WINCH ASSEMBLY

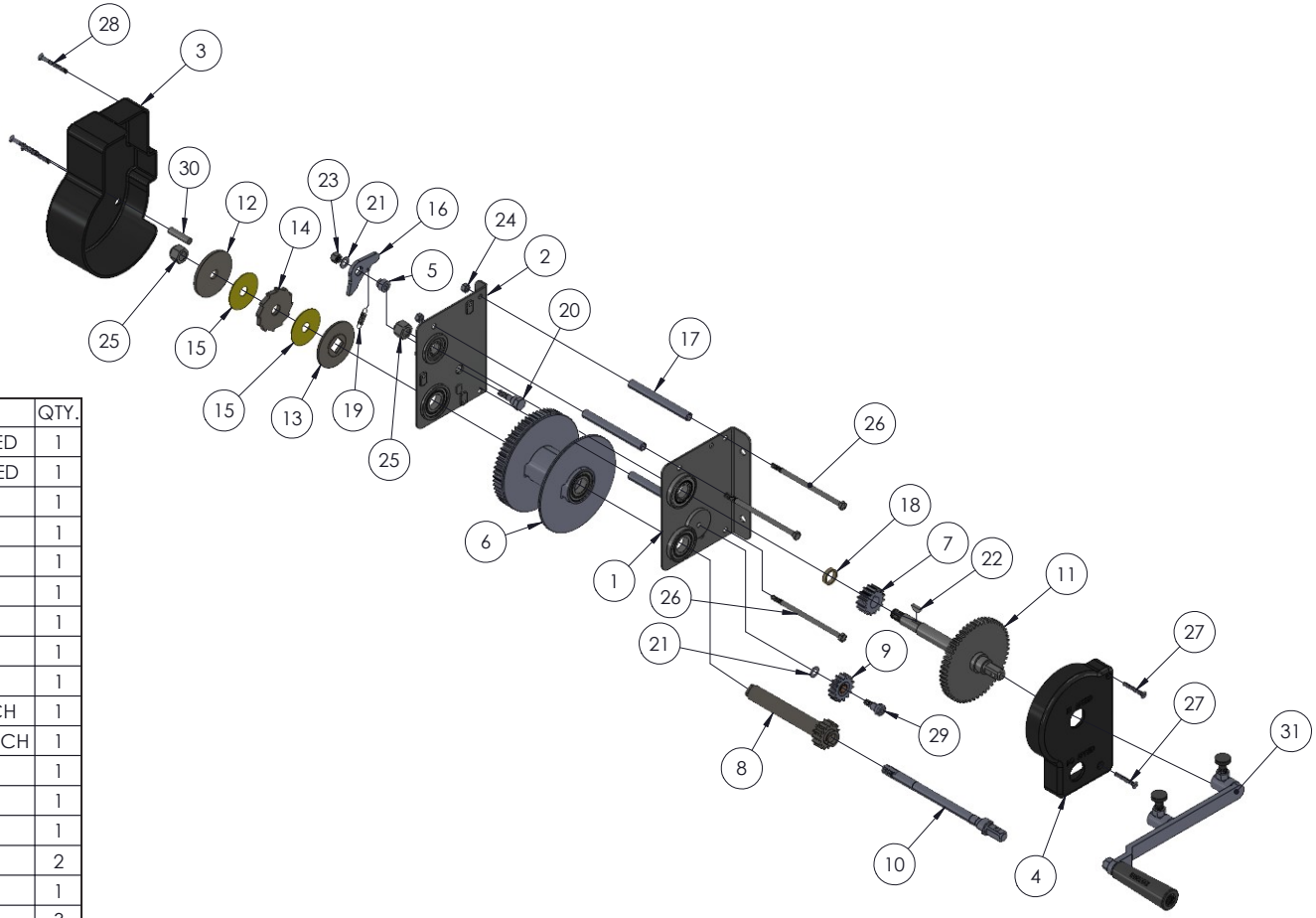

ITEM NO.	PART NUMBER	DESCRIPTION	QTY.
1	785381	SIDE PLATE ASSEMBLY -LH, WINCH 2-SPEED	1
2	785382	SIDE PLATE ASSEMBLY -RH, WINCH 2-SPEED	1
3	785395	WINCH COVER, RH WINCH 2-SPEED	1
4	785396	WINCH COVER, LH WINCH 2-SPEED	1
5	780251	RATCHET DOG SPACER WJ-55	1
6	780202	LOAD DRUM FINAL WLDMNT/ ASSY	1
7	780204	LOAD DRUM PINION WJ-5	1
8	784501	SHAFT, LOW SPEED PINION, SQ END	1
9	780207	IDLER GEAR ASSEMBLY	1
10	785393	LOW SPEED DRIVE SHAFT, 2-SPEED WINCH	1
11	785391	HI-SPD DRIVE SHAFT WLDMT, 2-SPEED WINCH	1
12	780212	PLATE, OUTER BRAKE DISC, NL WINCH	1
13	784498	PLATE, INNER BRAKE DISC, NL WINCH	1
14	780214	BRAKE RATCHET WJ-15	1
15	786955	UNIVERSAL BRAKE DISC	2
16	780217	LOAD RATCHET DOG WJ-20	1
17	780221	SPREADER BAR WJ-24	3
18	780225	LOAD DRUM PINION SPACER WJ-28	1
19	783621	RATCHET DOG SPRING	1
20	780612	RATCHET STUD CS-49	1
21	773042	WASHER, FLAT 5/16	2
22	774075	KEY #606 3/16" X 3/4"	1
23	772350	NUT, INSERT JAM 3/8 - 16	1
24	772502	NUT, INSERT JAM 5/16-18	3
25	772375	NUT, INSERT JAM 5/8 -16	2
26	771051	SCREW, HHC 5/16-18 X 6 GRD-2	3
27	771286	SCREW, FHM 1/4-20 X 1-3/4	2
28	771290	SCREW, FHSC 1/4-20 X 2.25"LN	3
29	780496	SHOULDER SCREW MODIFIED CS-51	1
30	785376	SPACER, 2 SPEED WINCH COVER	1
31	785398	WINCH HANDLE ASSEMBLY, 2 SPEED CB LIFT	1

WINCH HANDLE ASSEMBLY

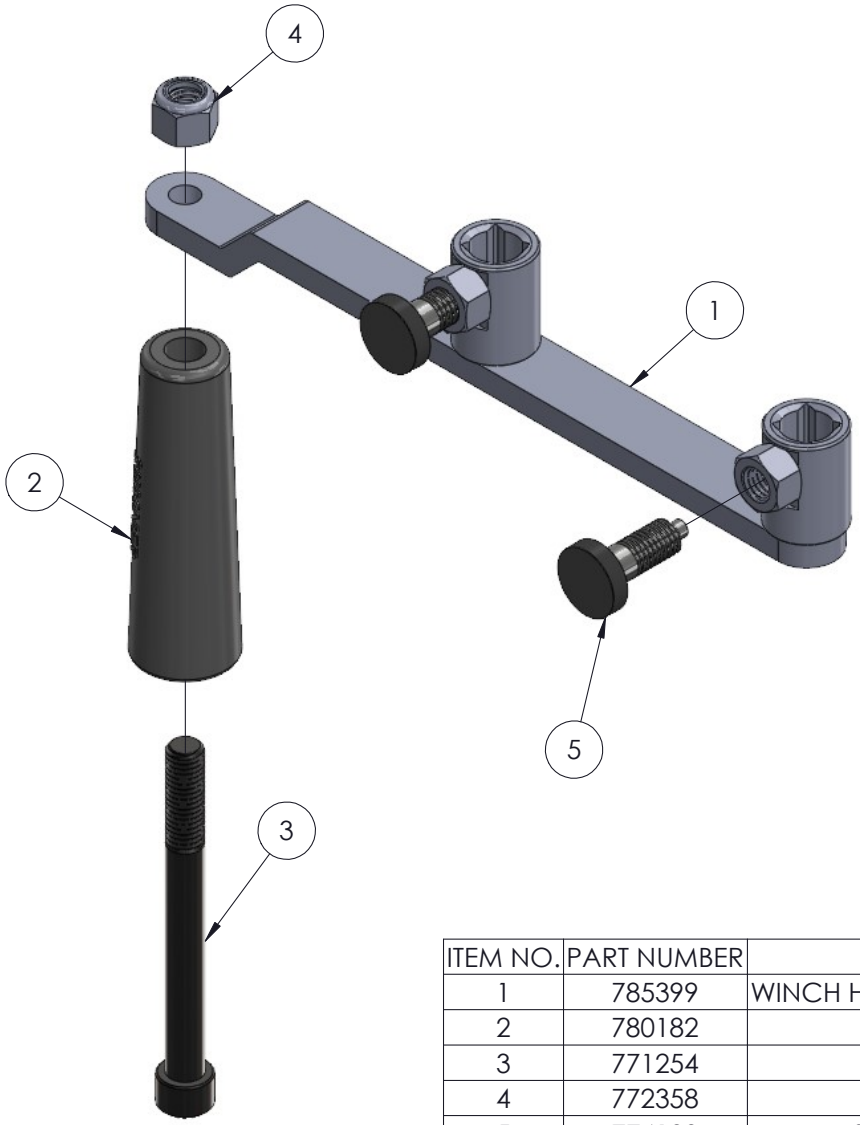

ITEM NO.	PART NUMBER	DESCRIPTION	QTY.
1	785399	WINCH HANDLE WELDMENT, 2-SPEED WINCH	1
2	780182	WINCH HANDLE SLEEVE	1
3	771254	SCREW, SHC 1/2 -13 X 5"LN	1
4	772358	NUT, INSERT JAM 1/2 -13	1
5	774180	SPRING PLUNGER,M 1/4 DIA.	2

HANDLE ASSEMBLY

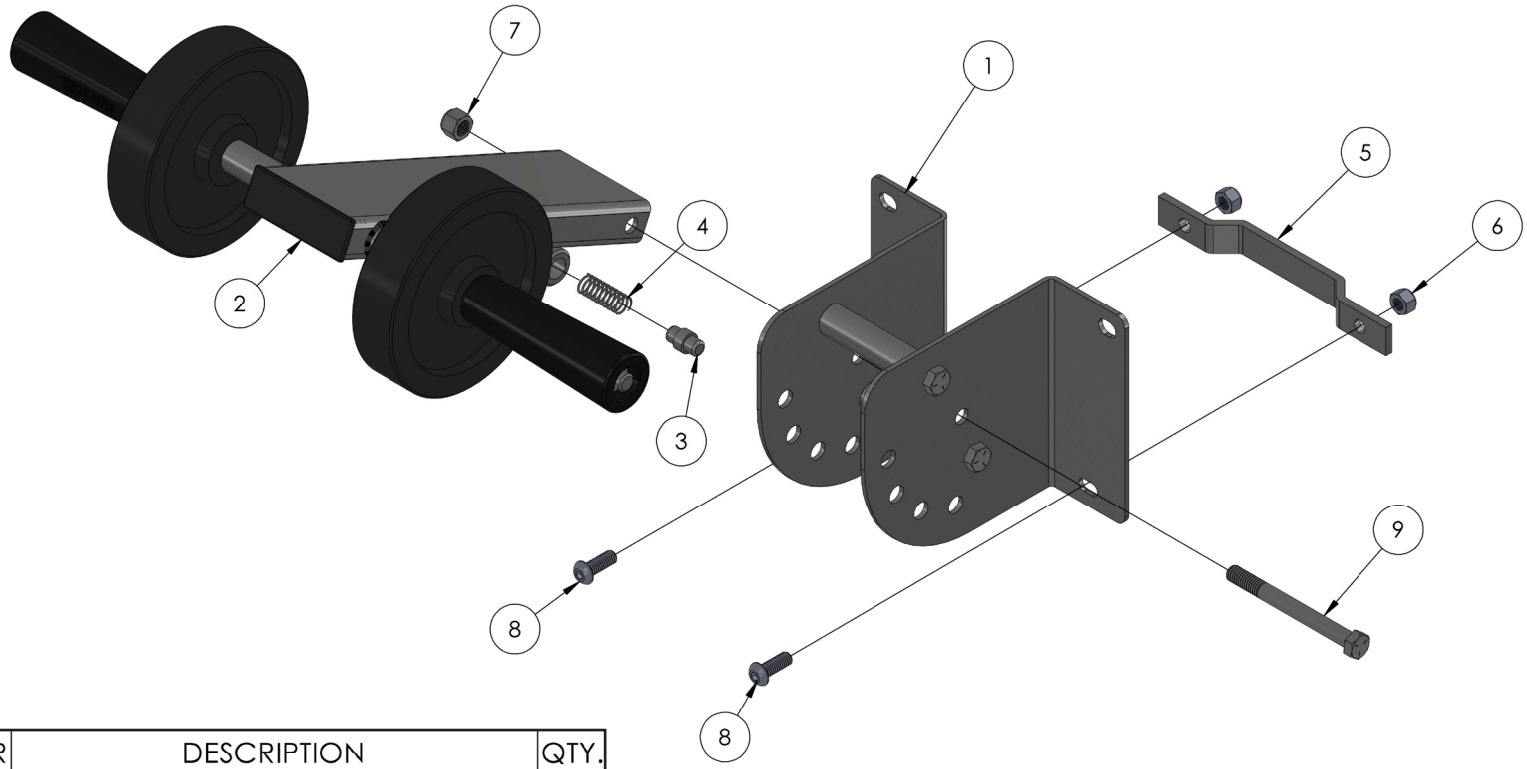

ITEM NO.	PART NUMBER	DESCRIPTION	QTY.
1	786576	HANDLE MOUNTING PLATE ASSEMBLY	1
2	786580	WHEEL HANDLE ASSEMBLY	1
3	783509	PIN DETENT	1
4	776212	SPRING, #DWC - 042 - G - 9	1
5	786696	STRAP FOR HANDLE ASSEMBLY	1
6	772502	NUT, INSERT JAM 5/16-18	2
7	772350	NUT, INSERT JAM 3/8 - 16	1
8	771239	SCREW, BHC 5/16-18 X 7/8	2
9	771098	SCREW, HHC 3/8-16 X 3-3/4	1